2015 13th International Conference on Frontiers of Information Technology

Customizable Transceiver Design of a Visible Light Communication System

Asad Ali, Amna Sehar, Sana Najaf, and Hafiz Muhammad Asif
Department of Electrical Engineering,
COMSATS Institute of Information Technology,
Lahore, Pakistan
Emails: {asad.ali1464@gmail.com, amna.sehar07@yahoo.com, sananajaf083@yahoo.com, hafizasif@ciitlahore.edu.pk}

***Abstract*—Visible Light Communication (VLC) is an optical wireless communication technology that can be used for data communication over optical wireless link. In this paper, a complete state-of-the-art Visible Light Communication (VLC) transceiver prototype has been physically designed. The developed VLC transceiver prototype can serve the purpose of both illumination and data communication simultaneously. The novelty of the design lies in the fact that it uses STM32F4Discovery board which is customizable over the Universal Synchronous/Asynchronous Receiver/Transmitter (USART) TX and RX protocols. The work covers complete hardware design of the transceiver including LED driving circuit, and full configuration of the STM32F4Discovery board. Furthermore, the proposed VLC design can also be used for audio communication.**

Keywords—data communication; interference free communication; VLC; STM32F4Discovery; USART

I. Introduction

Visible Light Communication (VLC) is an emerging green technology for data communication that has recently received attention as it can relieve the strain on the overloaded radio frequencies. Data demand is increasing exponentially but the radio spectrum is limited [1,2]. VLC offers the untapped visible light spectrum and may be very helpful as it constitutes an incredibly large bandwidth suited for high speed data transmissions [2]. Visible light is more energy proficient than radio signaling as it does not need high power base stations. It creates no health hazards and emits no harmful electromagnetic radiation. Chiefly, it enjoys the advantage of not causing any interference to and from RF-based devices [3].

LEDs are mostly used as VLC transmitters as they hold abundant advantages on other light sources such as low power, instant lighting, no UV radiation, operation in extreme conditions, fast switching, etc. [4]. In the transmitter design, the data to be transmitted is modulated and given to an LED driving circuit. At this interface the electrical-to-optical conversion occurs causing the LED to blink and transmit data at such high rates that the LED's flickering is not detected [2]. A data rate of larger than 100 Mbps is probable via high speed LEDs by suitable multiplexing techniques [5].

Photodiodes, turning light into electrical pulses, are the best suitable option for VLC receivers. Original data can be received by demodulating the signal received from the photodiodes [6].

A simple VLC system has been designed and analyzed in [7]. It has achieved serial communication between two computers interfaced with RS-232 cable. This paper extends their work to accommodate higher transmission speeds, larger data rates and the introduction of a physical layer making this advanced VLC system more self-sufficient.

VLC systems were discussed for real time data communication in [8] and [9] through circuits ranging from basic to refined using various voltage converters and operational amplifiers. Quality of sound and tone control is separately tended to within the circuits. Reference [9] also shows the simplicity with which audio and video signals can be integrated into one multimedia system. However, these VLC systems lack the option for secure or customizable methods for communication where the users' data can be less easily intercepted. The integrity of the data must be upheld by using algorithms to ensure secure exchange of data [2]. A better alternative could be the use of the Universal Synchronous/Asynchronous Receiver/Transmitter (USART) which is a both convenient and configurable communication method. It is a serial communication protocol used to facilitate communication in simplex, half-duplex and full-duplex modes. The USART is commonly used in micro-controllers. It provides personalisation, in that transmitting and receiving USARTs must be fixed at the same bit speed, character length, parity and stop bits for apt operation [10,11].

This paper targets a VLC communication system for customizable communication. Hence, the physical layer for data exchange has been developed under the USART protocol. Protocols should also be selected bearing in mind circuit limitations, channel responses and ease of implementation. USART communicates using the unipolar Non-Return-to-Zero (NRZ) protocol. Its digital pulses, as carriers, lead to simple circuitry in our hardware design and resolve power issues.

The rest of the paper is organized as follows: In section II the VLC transmitter prototype is designed and discussed. Section III expands on the VLC receiver prototype's experimental setup and design. Section IV elaborates on the USART protocol along with the use of the STM32F4Discovery board to setup the physical layer protocols. Finally, the closing section V concludes the paper with possible future prospects.

978-1-4673-9666-0/15 $31.00 © 2015 IEEE
DOI 10.1109/FIT.2015.33

IEEE computer society

Authorized licensed use limited to: TU Hamburg-Harburg. Downloaded on March 07,2025 at 14:11:28 UTC from IEEE Xplore. Restrictions apply.

II. Experimental Setup and Hardware Design of Transmitter

This section discusses the experimental design of the transmitter prototype for customizable communication using visible light. The block diagram, given in the figure below, labels the various stages in our complete hardware design. This section will discuss the transmitter design in detail.

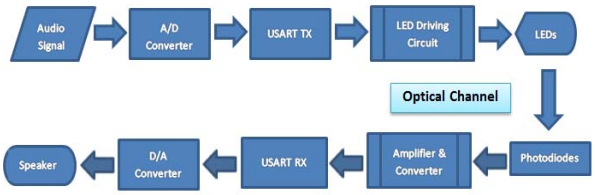

Figure 1. Block Diagram of Hardware Prototype.

A. Input Microphone Amplifier Circuit

In the transmitter, audio signal is first given to the microphone. The microphone amplifier circuit is used as a simple tool to amplify the input audio signal making it capable for further processing. The microphone, acting as a transducer, converts the voice signal to an electrical signal. This electrical signal is amplified using the LM386 audio amplifier. Fig. 2a and 2b respectively show the Proteus simulation and hardware prototype of the microphone amplifier circuit. Fig. 2c shows the microphone signal before amplification (Channel 1) and after amplification (Channel 2). Notice that even after amplification, the voice signal stays within the range of (-2V) – (+2V).

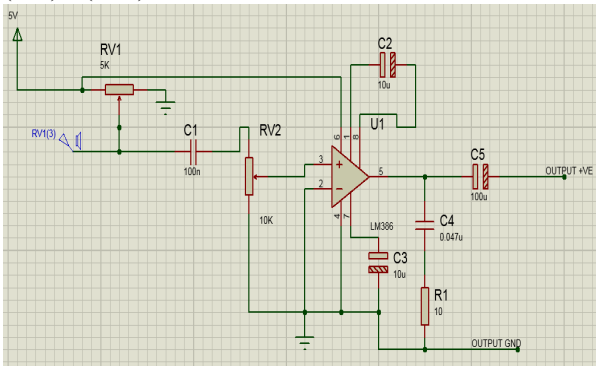

(a)

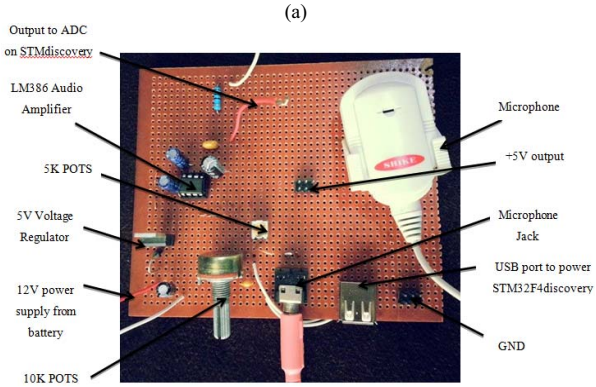

(b)

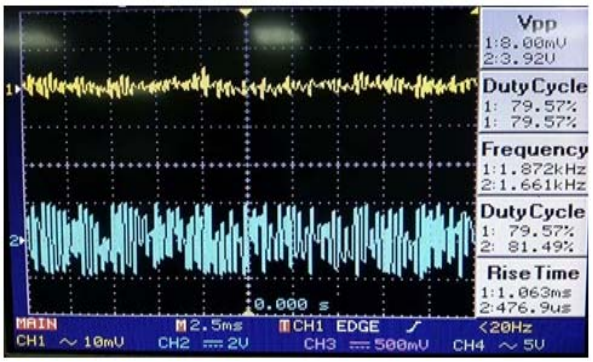

(c)

Figure 2. Microphone amplifier circuit: (a) Proteus simulation, (b) prototype design and (c) input and output.

5V power supply is given to operate the circuit since the LM386 is a low voltage amplifier. The 5K ohm potentiometer is used to connect the microphone to positive voltage along with supplying it the necessary power needed to operate. Since different microphones have different resistances, a potentiometer is used to set the resistance best for the circuit. The 10K ohm potentiometer is used to control the amplitude of the amplified sound signal. Different capacitors are used for the purposes of blocking DC, setting voltage gain, stabilizing oscillations and acting as current banks.

The output from this circuit is connected to the ADC (port C pin 0) on the STM32F4Discovery board where the voice signal is converted to digital bits. After conversion, the microcontroller readies the signal for USART serial transmission using USART_TX on port D pin 5 as output to the LED driver circuit.

B. LED Driver Circuit

The LED driver circuit takes the USART unipolar signal at its input (port D pin 5 from STM board) and using the TLP250 photo-coupler driver drives the IRF740 N- Channel MOSFET which provides dynamic dV/dt rating along with fast switching and simple drive requirements.

The switching capacity of a MOSFET further depends on its driver. TLP250 can provide a switching time of 0.5µs which can work to drive the I/O of the MOSFET to give faster switching to the high response LEDs ensuring better data transmission. The MOSFET gives on/off signals to the LED connected at its output and the LED transmits '1' and '0', as a result.

Fig. 3a and 3b respectively show the Proteus simulation and hardware prototype of the Transmitter circuit with LED arrays. The USART signal is digital in nature; therefore, it does not require any amplification or clamping. This makes our circuits simpler.

Authorized licensed use limited to: TU Hamburg-Harburg. Downloaded on March 07,2025 at 14:11:28 UTC from IEEE Xplore. Restrictions apply.

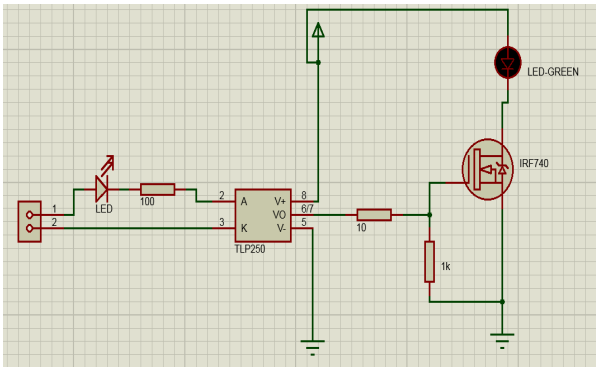

(a)

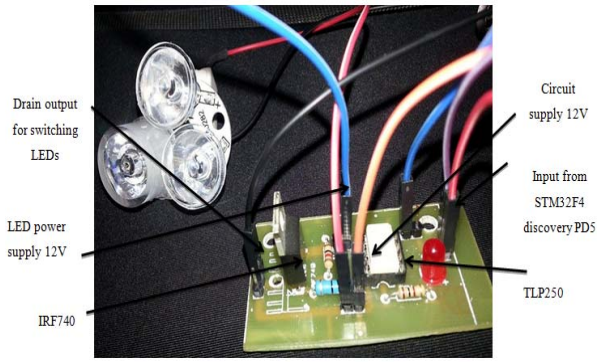

(b)

Figure 3. Transmitter circuit with LED Arrays: (a) Proteus simulation and (b) prototype.

C. Transmitter Prototype

Fig. 4 shows the entire Transmitter prototype of VLC for customizable communication. The microphone amplifier circuit takes the audio signal, amplifies it and outputs it over the blue wire which is given as input to the STM32F4discovery at port C pin 0 (Channel 10 ADC). The ADC converts the data to digital and readies it for serial transmission over port D pin 5. This pin is connected to the input of the LED driver circuit by the red wire. As a result, the binary transmission of the voice input signal is carried out.

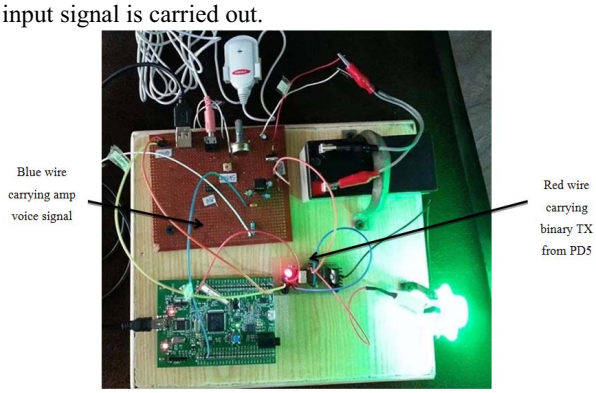

Figure 4. Transmitter prototype.

III. Experimental Setup and Hardware Design of Receiver

This section discusses the experimental design of the receiver prototype for customizable communication using visible light. The second half of the block diagram given in fig. 1 is deliberated upon in detail.

A. Photodiode Receiver Circuit

At the receiver end, the output of the BPW34 photodiode is very weak so we will first need to amplify the signal at the PD's output followed by its conversion to the unipolar square wave with the help of a Schmidt trigger to make it look like the USART wave ready for further demodulation and treating.

Fig. 5a and 5b respectively show the Proteus simulation and hardware design of the PD amplifier circuit which takes 5V and 100mA current in operation. When the PD generates a current after detecting light, a voltage is produced across the 100kΩ resistance. This voltage is given to the first stage of a two stage non-inverting amplifier. The LM358 IC is used for amplification and a 2V signal is produced. This amplified signal is further given to a comparator, LM393. The variable resistors at the comparator's input are set to compare the input signal with 1V. Signals below 1V are set to zero at the comparator's output and this helps to eliminate any noise added after the amplification process. Other signals are further amplified to 5V.

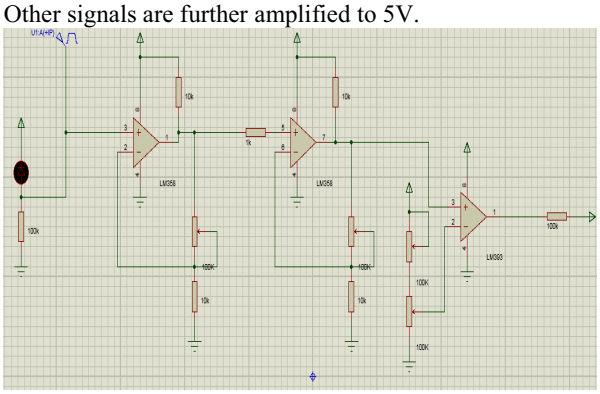

(a)

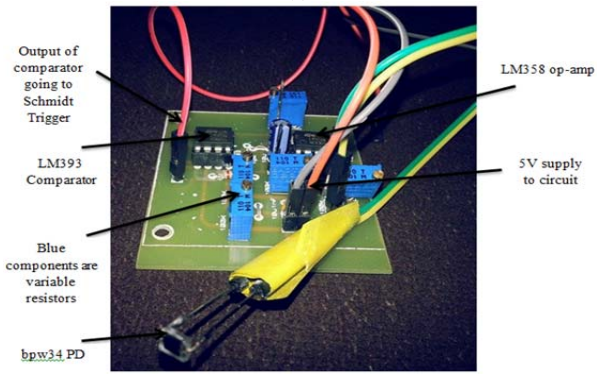

(b)

Figure 5. PD amplifier circuit with bpw34 photodiode: (a) Proteus simulation and (b) prototype.

Authorized licensed use limited to: TU Hamburg-Harburg. Downloaded on March 07,2025 at 14:11:28 UTC from IEEE Xplore. Restrictions apply.

This helps refine the signal to a more digital form making it more ready for the Schmidt trigger since the Schmidt trigger works better with high voltage signals. A Schmidt trigger is similar to a comparator and, like a comparator, it is a decision making circuit. Comparing the varying input signal with a preset threshold value, it outputs two voltage levels making the output a strictly binary response. Even though we used the LM393 comparator we still need to use a Schmidt trigger, HCF4093BE, since the response time of LM393 was insufficient to make a proper digital signal as is shown in Table I [12].

Fig. 6a and 6b respectively show the Proteus simulation and hardware design of the Schmidt trigger circuit which also has ratings of 5V and 100mA.

Fig. 7a shows on Channel 1 (top blue wave) the output of the photodiode after passing through only the amplifier circuit. Channel 2 (bottom yellow wave) shows the transmitted signal given to the LED driver circuit. As we can see, the output of the PD amplifier circuit does not yield a square wave. However, it does oscillate between the two levels. In order to make it a proper square wave, a Schmidt trigger is used.

TABLE I. TIMING COMPARISON AT SUPPLY VOLTAGE 5V

Component	Parameter
LM393	Response Time: 1.3µs
HCF4093BE	Rise time, Fall time: 20ns

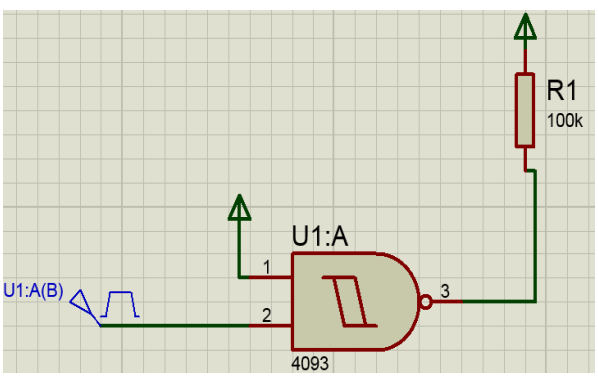

(a)

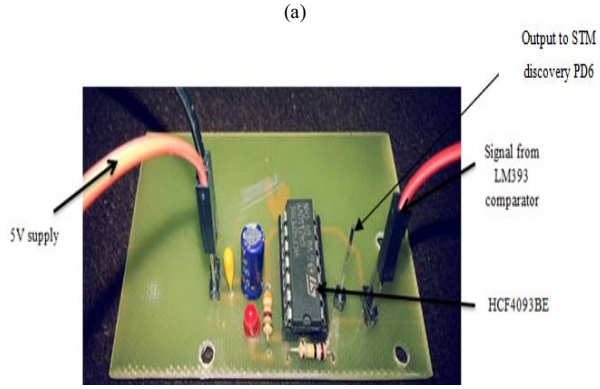

(b)

Figure 6. Schmidt trigger circuit: (a) Proteus simulation (b) prototype.

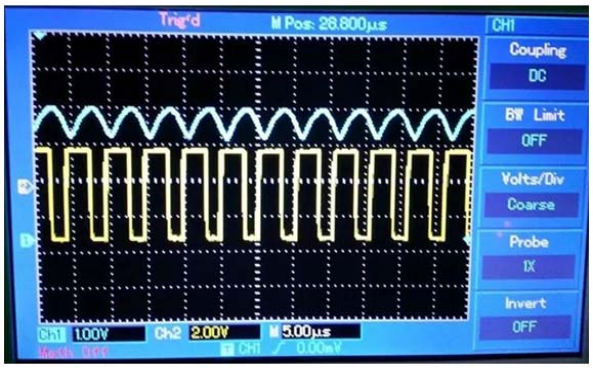

(a)

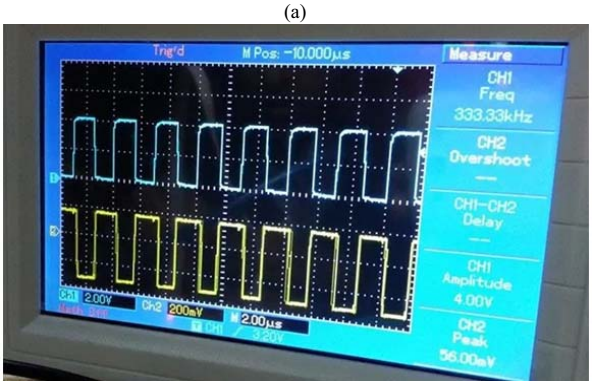

(b)

Figure 7. (a) Output of PD amplifier circuit on Channel 1, (b) Output of the Schmidt trigger circuit on Channel 2.

The output from the Schmidt trigger circuit is shown in Fig. 7b. Channel 2 (bottom yellow wave) now shows the received wave at the Schmidt trigger's output, whereas Channel 1 (top blue wave) shows the transmitted signal given to the LED driver circuit. Notice that the received wave lags the transmitted wave. This difference is due to the delay added by the various electrical components, namely amplifiers.

B. Output Speaker Amplifier Circuit

The output of the Schmidt trigger circuit is given to port D pin 6 of the STM32F4Discovery board as USART_RX for serial reception of data. This is followed by data conversion to an analog signal from a digital signal using the DAC on the STM discovery board. The output analog signal from the DAC is taken on port A pin 4, however, this signal is not enough for the speaker to work, as is seen in Fig. 8. The current rating of the STM discovery is low (maximum 25mA), thus an amplifier is needed to hear the voice signal over the speaker [13].

This amplifier is very similar to the microphone amplifier circuit in Fig. 2. Just like the microphone circuit, this uses the LM386 audio amplifier, 10K ohm potentiometer controls the sound volume and capacitors work as DC filters, gain controls and current banks. Fig. 9a and 9b respectively show the Proteus simulation and hardware prototype for the speaker amplifier circuit.

Authorized licensed use limited to: TU Hamburg-Harburg. Downloaded on March 07,2025 at 14:11:28 UTC from IEEE Xplore. Restrictions apply.

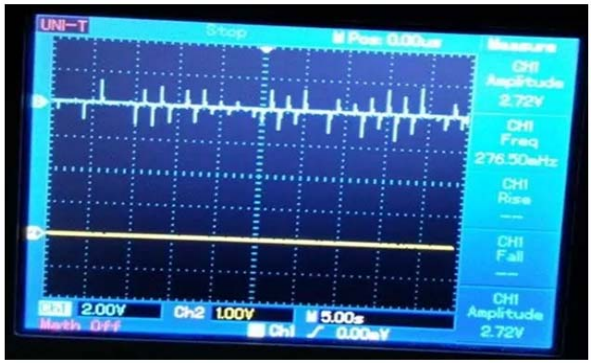

Figure 8. Signal at STM DAC output of port A pin 4.

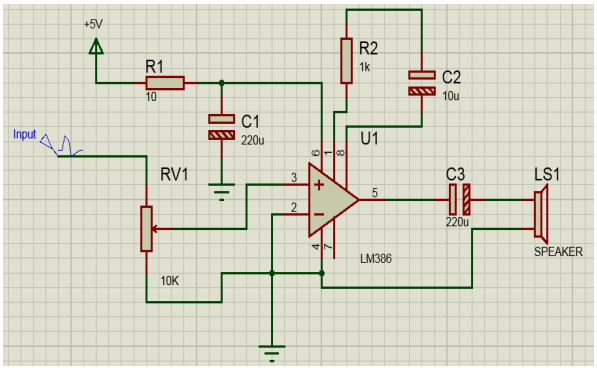

(a)

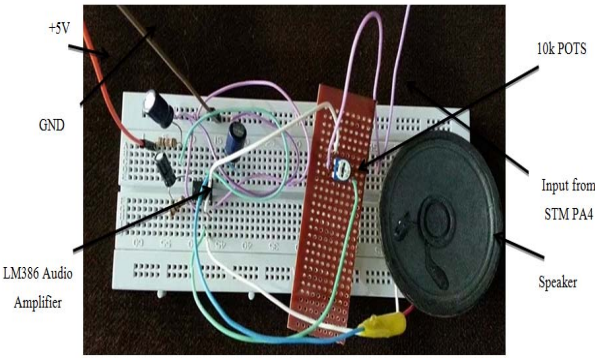

(b)

Figure 9. Speaker Amplifier circuit (a) Proteus simulation and (b) prototype.

C. Receiver Prototype

After the Schmidt trigger circuit outputs a proper unipolar square wave, given to port D pin 6 of the STM32F4Discovery board, the STM32F4Discovery serially receives this data and after 'collecting' it through its programmed protocol, converts it to an analog signal using the DAC feature on the board. The output of the DAC is given at port A pin 4 which is a very weak audio signal. This signal is, in turn, given to the speaker amplifier circuit which outputs the amplified sound to the speaker thus completing the path of communication using Visible Light Communication. This entire scenario is shown in fig. 10, the Receiver Prototype.

Fig. 11 shows both the transmitter and the receiver prototypes communicating over the air channel at a distance of approximately 0.5m.

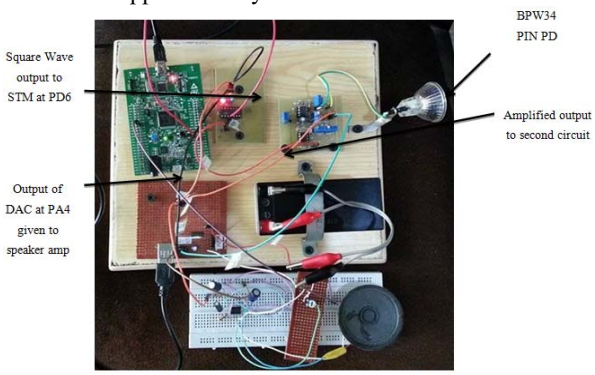

Figure 10. Receiver prototype.

Figure 11. Communication over the air channel at distance ~0.5m.

IV. USART AND STM32F4DISCOVERY BOARD

This section describes the USART protocol implemented over the physical layer and discusses the looked-for features provided by the STM32F4Discovery board.

A. USART

The USART offers a flexible means of full-duplex data exchange with the standard unipolar NRZ serial data format. It offers a very wide range of baud rates using a fractional baud rate generator [13].

Using the asynchronous mode for communication, it must be noted that the microcontrollers communicating must agree on the bit-rate and transmission speed as they only have to coordinate the start bit's falling edge. The USART signal outputs at 3.3V from the STM board to the LED driver circuit. The data format is described by a logical signal in which when the line is idle, it gives a high voltage level. A transmission starts with a low start bit (logic 0), the data bits, an optional parity bit and one to two stop bits (logic 1). The data is transmitted one byte at a time [10].

B. STM32F4Discovery Board

The major portion of the block diagram in fig. 1 is focused on signal processing, transmission and reception. The voice signal undergoes ADC before following a protocol for serial transmission in the Transmitter. Upon reception, the signal is serially received and converted

Authorized licensed use limited to: TU Hamburg-Harburg. Downloaded on March 07,2025 at 14:11:28 UTC from IEEE Xplore. Restrictions apply.

back to an analog signal using DAC.

Following these reasons, we chose the STM32F4Discovery board. It helps to discover the STM32F407 & STM32F417 lines' high performance features and to develop applications. It is a low-cost, very high speed and easy-to-use development kit. It consists of an onboard debugger which helps to quickly evaluate the compiled code. Development is convenient with the high-performance microcontrollers that feature 1 MB of flash memory and 192 KB of RAM, valuable to buffering [12].

We used the on-board USART, ADC and DAC features on the STM32F407 IC on both STM32F4Discovery boards, one on the transmitter side and the other at the receiver side.

V. Conclusion

In this paper, a state-of-the-art VLC system was developed using USART and STM32F4Discovery board. Results have been presented to validate the connectivity and performance matrix of the system. It is worth noting that this system is capable of audio communication. Although the audio input circuit was successfully implemented, the audio signal faced problems when processed by the STM board. These issues are intended to be addressed in future works. Moreover, this work has the potential to extend itself to commonly used modulation schemes such as FSK, etc. to achieve safer communication.

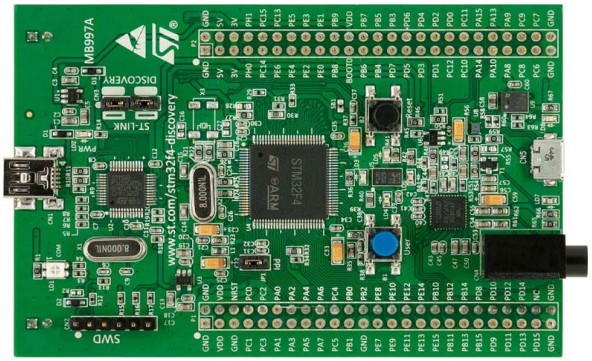

Figure 12. STM32F4DISCOVERY Board.

Acknowledgment

The authors wish to appreciate the support and acknowledge the privilege and opportunity granted to them by COMSATS Institute of Information Technology.

References

[1] N. Enlightened. (2012, 2014, Nov. 16). *Visible light communication* [Online]. Available: http://www.supremearchitecture.com/content.php?id=1010

[2] Punith P. Salian, Sachidananda Prabhu, Preetham Amin, Sumanth K.Naik, and Dr. M.K. Parashuram, "Visible light communication," in Texas Instruments India Educators' Conference. pp. 379-383, 2013.

[3] K.Sindhubala and B.Vijayalakshmi, "Ecofriendly data transmission in visible light communication," in IEEE. 2015.

[4] G. Holzmann and B. Pehrson, *The early history of data networks* vol. 6. Los Alamitos: IEEE Computer Society Press, 1994.

[5] Shinichiro Haruyama, "Advances in visible light communication technologies," in ECOC Technical Digest OSA. 2012.

[6] Amrutha.S, Ansu Mathew, Rajasree.R, Swathy Sugathan, and Aravind.S, "A visible light communication system for indoor application," in IJEIT, vol. 3, issue 12. pp. 40-42, June 2014.

[7] Aazib Gilani, Asma Siddique, Nimra Munir, Amna Qayyum Khan, and Hafiz Muhammad Asif, "Prototype design of white LED data communication system and optical channel modeling," in IEEEP. Pakistan, 2015.

[8] Lih Chieh Png, Sharon Xueqi Lim, A. Rajamohan, Boone-Wy Chan, and Faiz Azhar Hazman, "Designs of VLC transceiver circuits for reading light transmission of high-quality audio signals on commercial airliners," in ICCE. Taiwan, pp. 97-98, 2014.

[9] Lih Chieh Png, "A fully integrated audio, video, and data VLC transceiver system for smartphones and tablets," in IEEE 17th ISCE. pp. 249-250, 2013.

[10] Community. (2014, 2015, July 13). *Electrical engineering* [Online]. Available: http://electronics.stackexchange.com/questions/37814/usart-uart-rs232-usb-spi-i2c-ttl-etc-what-are-all-of-these-and-how-do-th

[11] Tech Target. (2012, 2015, July, 13). *USART* [Online]. Available: http://whatis.techtarget.com/definition/USART-Universal-Synchronous-Asynchronous-Receiver-Transmitter

[12] STlife.augmented. (2014, Jan.). *HCF4093* [Online]. Available: http://www.st.com/web/en/resource/technical/document/datasheet/CD00000398.pdf

[13] STlife.augmented. (2014, Oct.). *RM0090 Reference Manual* [Online]. Available:http://www.st.com/web/en/resource/technical/document/reference_manual/DM00031020.pdf

Authorized licensed use limited to: TU Hamburg-Harburg. Downloaded on March 07,2025 at 14:11:28 UTC from IEEE Xplore. Restrictions apply.